♦ 1.00 Pitch DDR3 DIMM 240 Pos. Vertical, VLP Dip Type

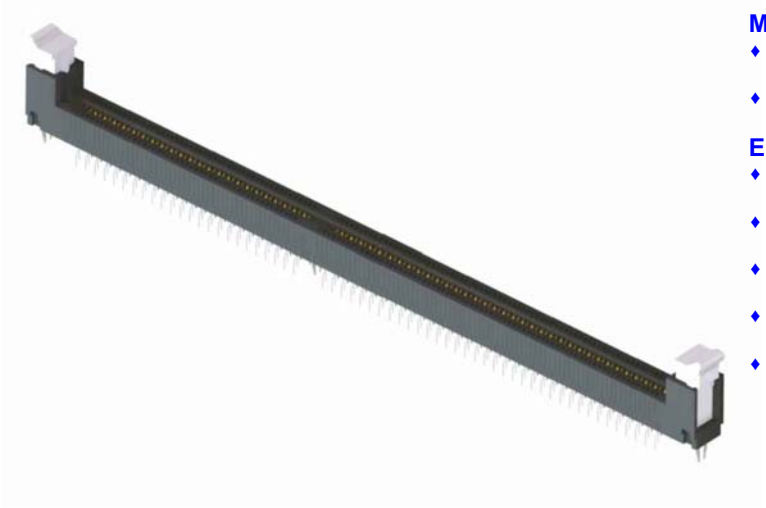

Mechanical Specifications:

- Durability
  25 Cycles
- Operating Temperature Rating
  -10°C to +85°C

Electrical Specifications:

- Rated Voltage
  30V AC (Per Pin)
- Rated Current
  1.0A
- Contact Resistance
  30 mohms Initial
- Dielectric Withstanding Voltage
  500V AC for 1 Minute
- Insulation Resistance
  1000 Megohms

Ordering Information:

68610 - A4 - 240 **

Physical:

- Housing & Latch
  High Temp. Plastic, Glass UL 94V-0 Rated
- Terminal
  Copper Alloy
- Forklock
  Copper Alloy
- Terminal Plating
  Gold Plating on Contact Area
  Tin Plating on Solder Tails
  Nickel Underplating Overall
- Forklock
  Tin Plating on Solder Tails
  Nickel Underplating Overall

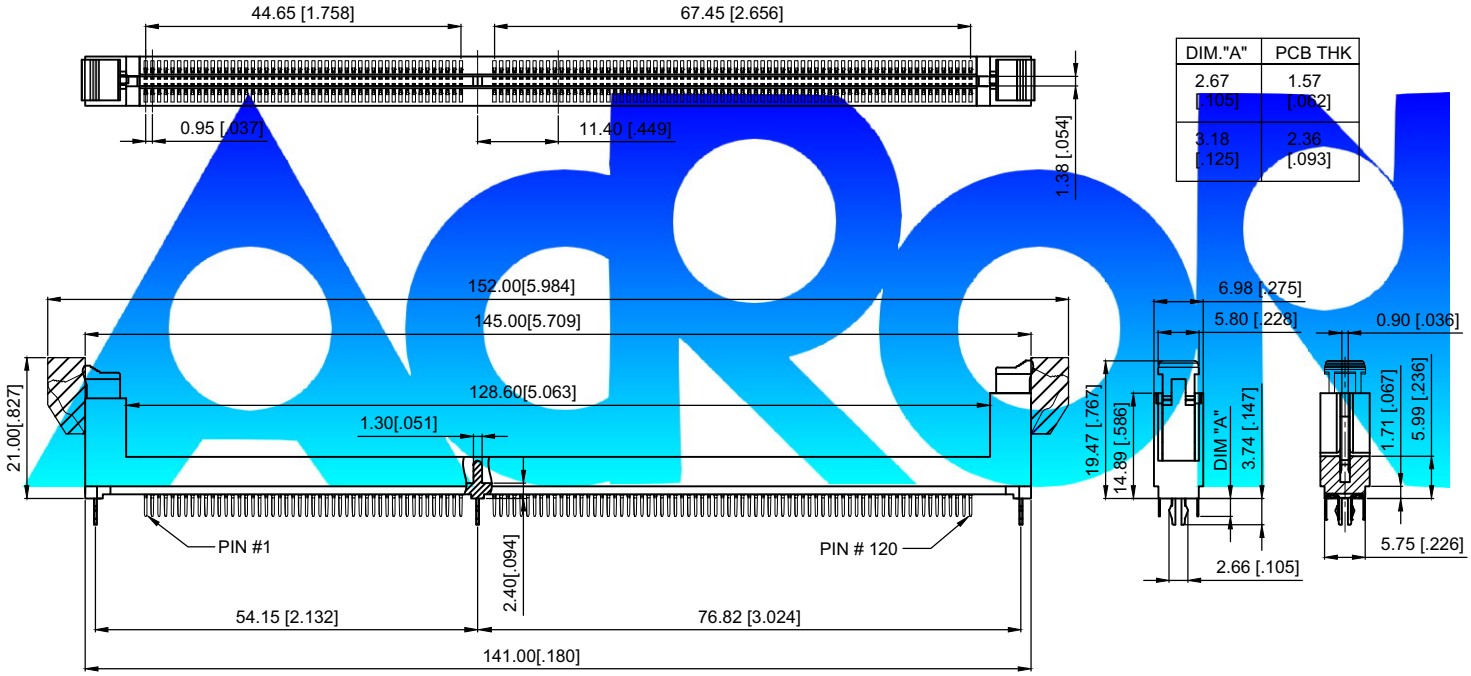

DIM."A"	PCB THK
2.67 [.105]	1.57 [.062]
3.18 [.125]	2.36 [.093]

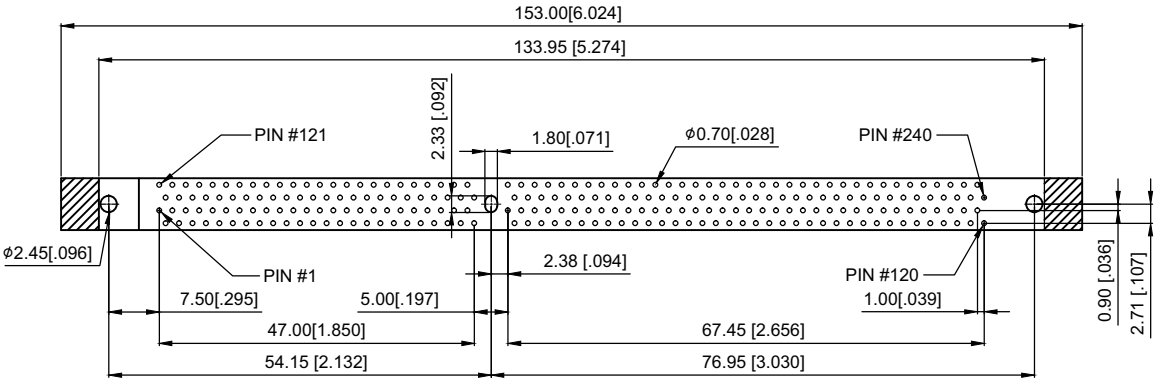

Recommended PCB Layout
(Top View)

♦ 1.00 Pitch DDR3 DIMM 240 Pos. Vertical, VLP Dip Type

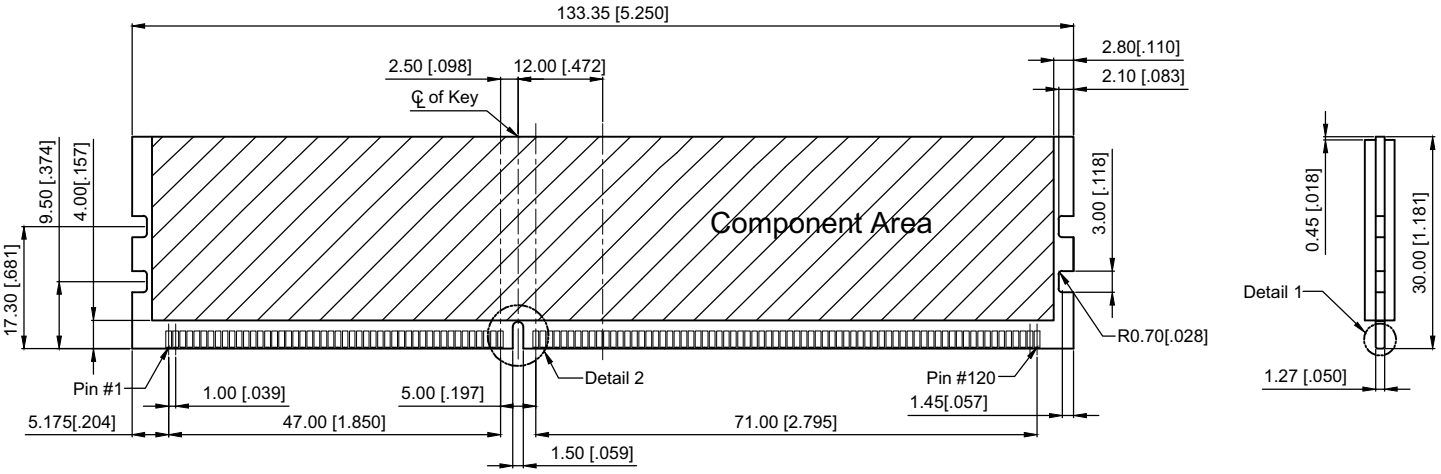

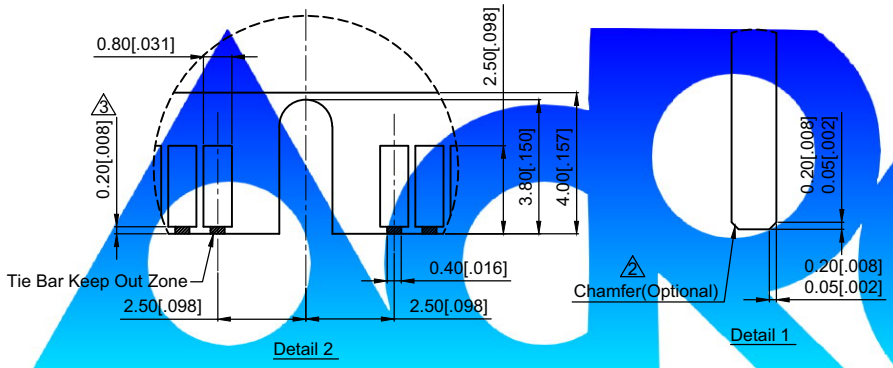

Notes:
1.Recommended Plating For Contact Pads:
Preferred:0.76 Micrometers Gold Plating Min. over 2.00 Micrometer Nickel
Alternative:0.05~0.75 Micrometers Gold Plating over 2.00 Micrometers Nickel Must Use an Electronic Contact Grade Corrosive Barrier Lubricant
2 Chamfer is Optional and is Not to Hit Gold Pads
3 Leading Edge of Gold Pads Specified by Keep Out Zone Shall be Free of Burrs and External Tie Bars.