♦ M12 A-Coding 4A 4&5P Panel Rear Mount Male Solder

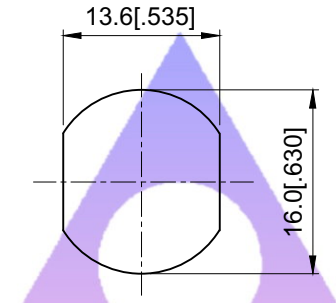

Recomend Panel Cut-Out

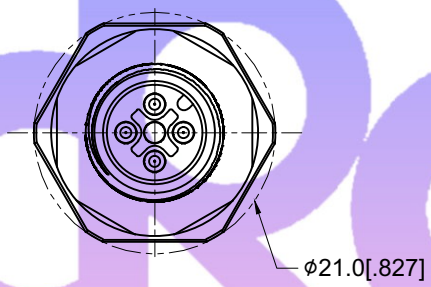

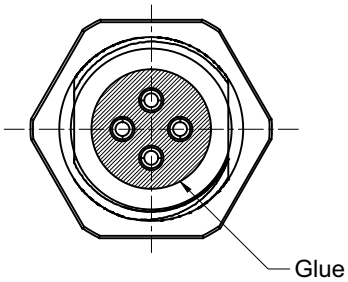

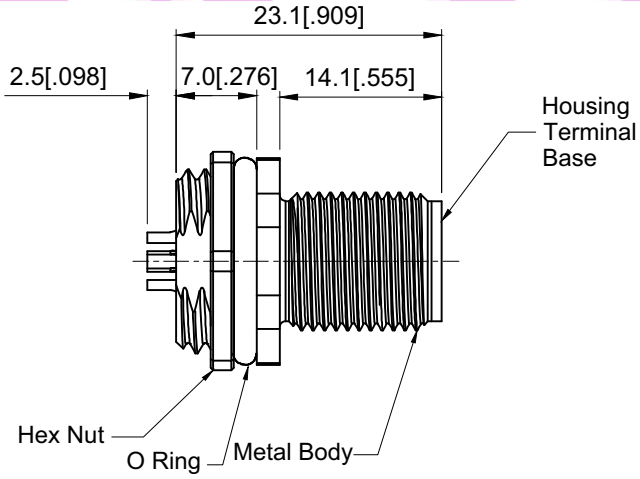

Pin Assignment	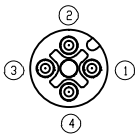	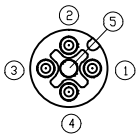
Model No.	CIR03-A4-4C3*000	CIR03-A4-5C3*000

Ordering Information:

CIR03 - A4 - * C3 * 000
1 2

1.Pin Assignment
4,5
2.Plating Options
0:Gold Flash in Contact Area
2:15u" Gold in Contact Area
3:30u" Gold in Contact Area
4:6u" Gold in Contact Area

Physical:

- Housing
  Thermoplastic, Black Color
- Terminal
  Copper Alloy
- Glue
  Epoxy, Black Color
- Base
  Thermoplastic, Black Color
- Metal Body
  Copper Alloy
- Hex Nut
  Copper Alloy
- O-Ring
  Silicone , Red Color
- Terminal Plating
  Gold Plating
- Hex Nut Plating
  Nickel Plating
- Metal Body
  Nickel Plating

Specifications:

- Waterproof Rate
  IP68
- Recommend Panel Thickness
  0.8mm to 3.0mm
- Recommend Torque
  9~10 kgf-cm
- Durability
  100 Cycles Min.
- DWV
  1400 Vrms for 4P
  1000 Vrms for 5P
- Rated Voltage
  250V AC/DC for 4P
  60V AC/DC for 5P
- Insulation Resistance
  100 MΩ Min.